Hybrid Stepper Motor

KL23H286-20-8B

UNIT=MM:

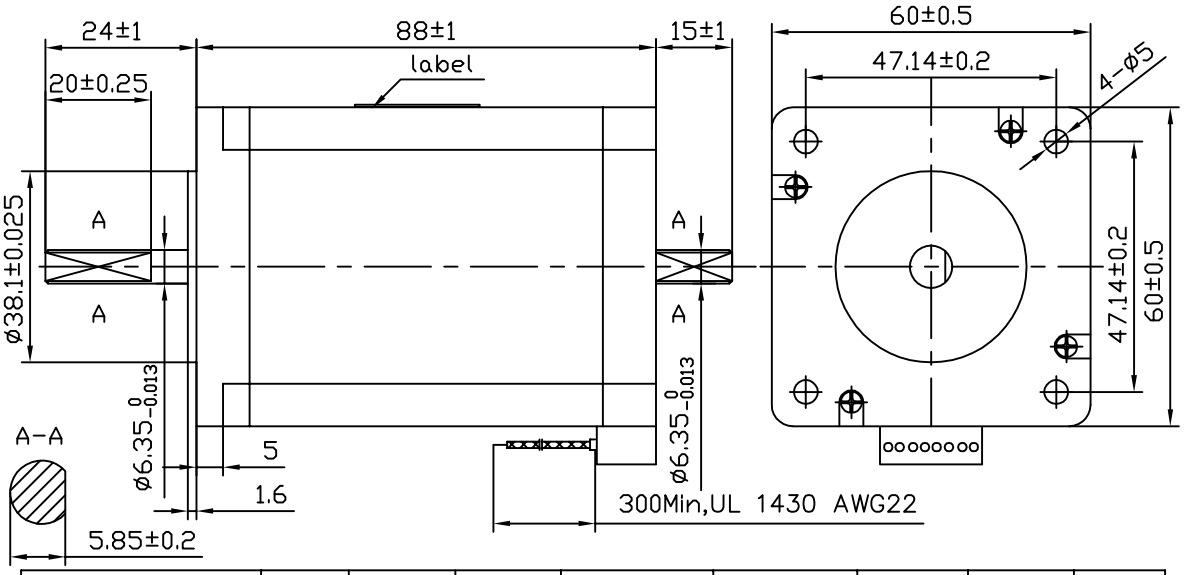

CONNECTION STYLE	STEP ANGLE	RATED VOLTAGE	CURRENT	RESISTANCE	INDUCTANCE	HOLDING TORQUE	ROTOR INERTIA	WEIGHT
	DEG /STEP	V	A	Ω	mH	OZ-IN	gcm^2	Kg
Unipolar	1.8	6.0	2.0	3.0	6.8	305	840	1.4
Parallel		4.17	2.8	1.5	6.8	425		
Series		8.4	1.4	6.0	27.2			

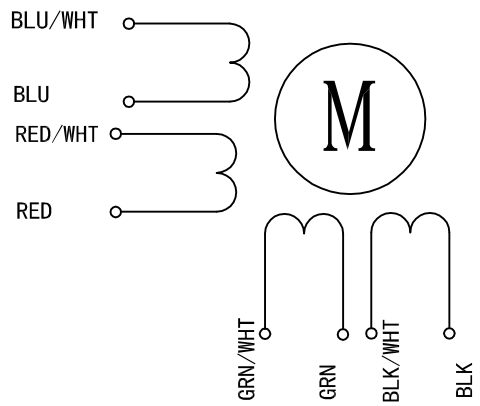

Bipolar (Parallel) Connection

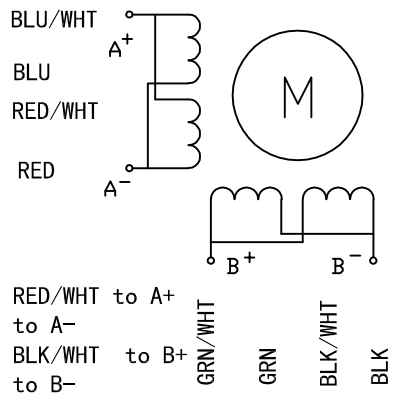

BLU/WHT & RED/WHT to A+
BLU & RED to A−
GRN/WHT & BLK/WHT to B+
GRN & BLK to B−

Bipolar (Series) Connection

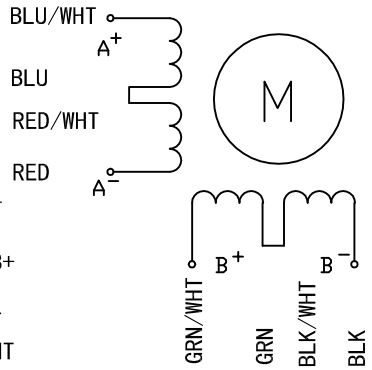

BLU/WHT to A+
RED to A−
GRN/WHT to B+
BLK to B−
BLU & RED/WHT
GRN & BLK/WHT

Unipolar Connection

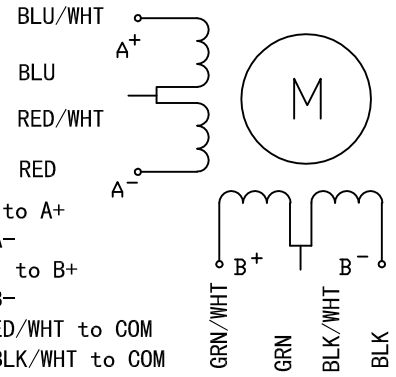

BLU/WHT to A+
RED to A−
GRN/WHT to B+
BLK to B−
BLU & RED/WHT to COM
GRN & BLK/WHT to COM